Revolution 20

RIDES

The spiraling motion is electrifying as the Revolution's giant arm swings 20 riders 60 feet in the air. With its inward-facing inverted seating, the combination of the swinging arm and rotating passenger vehicle creates the ultimate ride sensation. The Revolution is designed by KMG.

CHANCE RIDES®

316.945.6555
sales@chancerides.com
chancerides.com

Revolution 20

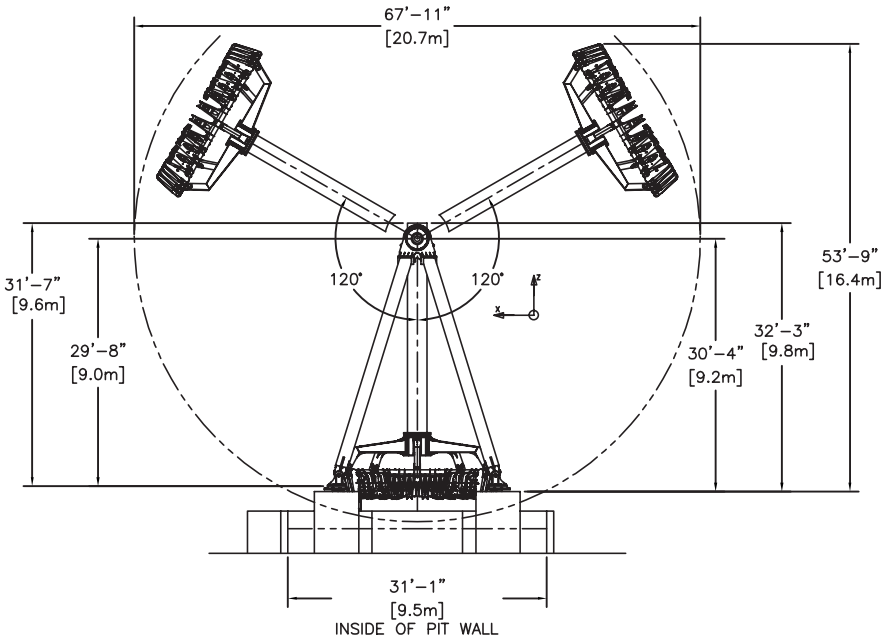

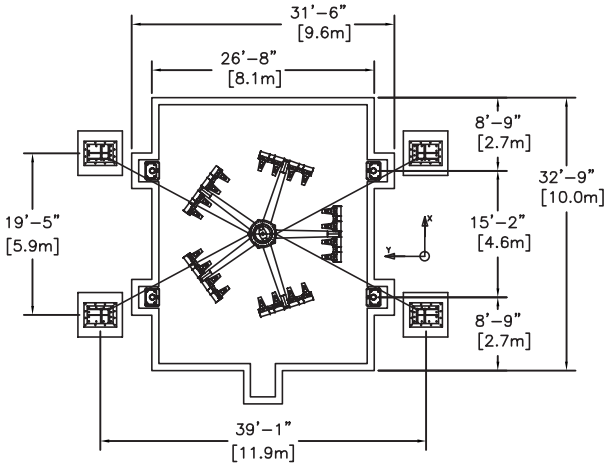

FEATURES

STANDARD FEATURES

- 20 Simultaneously loading seats
- Secure over-the-shoulder restraint system

OPTIONAL FEATURES

- Energy saving LED light bulbs
- Custom theming

SPECIFICATIONS

SEATING

Number of seats 20
Maximum number of passengers per seat 1
Average passenger weight per seat ..... 170 lbs.
Maximum total passenger weight ..... 3,400 lbs.
Minimum passenger height ..... 48 in.
Loading ..... all passengers simultaneously

PERFORMANCE

Direction of travel ..... clockwise
Ride speed ..... 9 rpm
Ride duration ..... 2 min.
Maximum wind speed (operating) ..... 35 mph
Maximum wind speed (static) ..... 80 mph

MAXIMUM RIDE WEIGHT

Empty ..... 33,000 lbs.

CLEARANCE DIMENSIONS

Frontage width (ground) ..... 49 ft.
Frontage width (air) ..... 68 ft.
Height (loading) ..... 38 ft.
Height (operating) ..... 61 ft.

POWER REQUIREMENTS*

Total ..... 115 kW
Drive ..... 65 kW
Lights ..... 50 kW
Min./Max. voltage ..... 460/480 volt, 3 phase, 60 Hz

DRIVE*

Type ..... AC
Motor Type ..... 230/460 volt, 3 phase, 60 Hz
Number of motors 7
Horsepower rating ..... 2 @ 30hp, 1 @ 10hp, 4 @ 5hp

LIGHTING*

Type ..... 110 volt incandescent

* All rides can be electrically wired to operate on other specified voltage.

Specifications are effective as of publication date. Because we strive to improve every Chance Rides product, these specifications are subject to change without notice. Dimensions given are approximate. For actual dimensions and installation specifications, please refer to Chance Rides foundation drawings. This ride conforms to all applicable ASTM amusement ride standards in effect on the date of manufacture.

PO Box 9046 • Wichita, KS 67277 • **TEL** 316.945.6555 • **EMAIL** sales@chancerides.com • **WEB** chancerides.com

©2022 Chance Rides, Inc. All Rights Reserved.